Modern Anesthesia Ventilators and the Pediatric Patient

Society for Pediatric Anesthesia Meeting
March 10, 2007

Stephen Stayer, MD
Texas Children's Hospital

Jeff Feldman, MD
The Children's Hospital of Philadelphia

Michael Mitton, CRNA
Director of Clinical Affairs, GE Healthcare

Mechanical ventilation of pediatric patients in the operating room can be challenging. Even small changes in delivered volume can be a significant percentage of the desired volume and lead to unintended hyper- or hypoventilation. Due to the unique physiology of children,the consequences of these unintended ventilation changes can be hypoxemia, hypercarbia and/or barotrauma. When using a traditional anesthesia machine, fresh gas flow and circuit compliance both influence the volume delivered to the patient. Despite the sophistication of bedside monitoring technology, adequate ventilation of the pediatric patient continues to include subjective assessment of chest movement by the caregiver. Although clinical assessment is important, it is not very useful for assessing changes in ventilation when the patient is hidden under the surgical drapes. Modern anesthesia ventilators are designed to eliminate many factors which can influence delivered tidal volume that are inherent in traditional anesthesia machines. The following information will review the unique aspects of pediatric ventilation in the operating room, the limitations of traditional anesthesia machine technology and the features of modern anesthesia ventilators that address the limitations of traditional technology.

Anatomy and Physiology

Infants have greater oxygen consumption and carbon dioxide production, as much as three times greater in the neonate versus the adult. Therefore, even at rest there is added burden to the respiratory system. Physiologists debate whether the FRC (lung volume at the completion of normal tidal ventilation) of a newborn is reduced or unchanged; however, because oxygen consumption is significantly greater, the oxygen reserve from FRC is more rapidly consumed, and hypoxia rapidly develops upon cessation of ventilation. Also, neonates encroach upon the closing volume during normal tidal breathing, producing areas of hypoventilation or collapse within the lung and resulting in increased intrapulmonary shunting. The awake infant will re-establish lung volumes from crying and movement. Sedation, lingering neuromuscular blockade, and residual anesthetic effects may exacerbate the tendency toward the loss of lung volume, contributing to cyanosis and respiratory distress after surgery.

Lung compliance of a neonate is about one-twentieth of adults, and airway resistance is 15 times greater. The chest wall of an infant is very compliant and decreases rapidly for the first 2 years of life becoming approximately equal to that of an adult. Stiff lungs that reside within a compliant chest create poor mechanics for increasing tidal volumes, and for this reason infants develop tachypnea when the respiratory system is burdened.

The diaphragm performs the majority of the work of breathing in small children. The "bucket handle" effect of the ribs, which increases the anteroposterior distance of the chest cavity, is not yet fully effective in small children. This additional lack of effectiveness of the thoracic cage limits the infants' ability to increase tidal volume; and therefore, increases in minute ventilation result in an increase in respiratory rate. An infant also has a greater proportion of type I muscle fibers in the diaphragm which are more prone to fatigue that type II fibers predominating in the adult diaphragm.

In adults 20% of airway resistance is accounted for by the small airways, whereas in neonates and small infants 50% of airway resistance occurs in the small airways. Hence, even relatively small decreases in the caliber of these airways can lead to significantly increased airway resistance and work of breathing.

Choosing the appropriate endotracheal tube

The narrowest portion of the of a child's larynx is at the level of the cricoid cartilage, as opposed to adult patients whose limiting airway diameter is at the level of the vocal cords (rima glottidis). Uncuffed ETTs are commonly used in children because a seal is created between the tracheal mucosa and the tube at the level of the cricoid cartilage. The adequacy of this seal is usually assessed by performing a leak test in which a gradual increase in positive pressure is delivered through the breathing circuit while the practitioner listens over the mouth or neck for the sound of escaping gas. The circuit pressure at which a leak is auscultated is then documented. The leak test provides the best assessment of tube fit; however, significant interobserver variability has been demonstrated. While the appropriate ETT size may be predicted by the patient's age, a tube smaller or larger than predicted should be inserted to achieve the most appropriate tracheal fit.

A tight fitting ETT (e.g., no gas leak up to 30-35 cmH_2O) may cause ischemic injury to the tracheal mucosa and submucosa at the level of the cricoid cartilage. Mild ischemia and subsequent swelling may be manifest as post-extubation stridor, whereas subglottic stenosis may result from more severe injury. On the other hand, placement of an ETT with a gas leak at low inflating pressures (e.g., <15 cm H_2O) results in excessive leak around the endotracheal tube and difficulty providing adequate ventilation during and after surgery. Lung compliance may be reduced, as a result of surgical traction or pulmonary edema, resulting in the need for delivery of greater inflating pressures to provide physiologic tidal volumes. With a loose fitting ETT in place, the volume of gas leak around the ETT increases as the peak inflating pressure is increased, while alveolar ventilation may remain unchanged. Gas leakage representing more than 50% of tidal volume has been demonstrated in the setting of decreasing lung compliance. Associated decreases in minute ventilation may lead to dangerous elevations in $PaCO_2$.

In addition to the risk of inadequate alveolar ventilation, there are other hazards associated with placement of a loose ETT. Lung function measurements are commonly used to guide mechanical ventilation in the postoperative period. A variable leak around the ETT results in inaccurate measurements of exhaled tidal volumes, lung compliance, and airway resistance. Eliminating or minimizing the gas leak around the ETT will decrease the environmental pollution from either inhaled anesthetic agents or nitric oxide. Lastly, an adequate seal around the ETT may decrease the risk of pulmonary aspiration should gastric contents be regurgitated following tracheal intubation.

Most authors of pediatric anesthesia texts recommend the use of uncuffed ETTs in children under the age of 8 years. However, there is limited scientific evidence to support this practice. Modern low pressure, high volume, endotracheal tube cuffs can seal the airway without generating pressures which exceed the capillary pressure and injure the mucosal wall. Cuffed endotracheal tubes have been used in more than 15,000 children, none of whom developed clinically significant airway complications, and the use of cuffed ETTs for short cases in the operating room reduces the need for repeated laryngoscopy, allows use of lower fresh gas flows, and limits environmental contamination with anesthetic gases. There is no difference in the incidence of airway complications among pediatric intensive care patients intubated with cuffed vs. uncuffed endotracheal tubes. Alterations in lung compliance may increase the leak around the endotracheal tube in children during or after surgery, and a cuffed ETT may be inflated to compensate for such changes.

A disadvantage of using cuffed ETTs is that their outer diameter is approximately 0.5 mm larger than uncuffed ETTs with the same inner diameter. As a result, a tube with an inner diameter one size (i. e., 0.5 mm) smaller must often be used when a cuffed ETT is placed. This results in greater resistance to gas flow and an increased risk of occlusion of the ETT with blood and tracheal secretions. While a reduction of the tracheal tube diameter by only 0.5 mm might not be expected to effect a clinical change, gas flow resistance increases exponentially at smaller tube diameters. While a reduction in tracheal tube size from 8.0 mm I.D. to 7.5 mm I.D. increases airway resistance by 29%, a change from a size 4.0 mm I.D. to a 3.5 mm I.D. tube results in an increase of 71%, and a change from a 3.5 mm I.D. tube to a 3.0 mm I.D. tube increases resistance by 85%. The increase in resistance is even more profound if turbulent airflow occurs in smaller tracheal tubes.

Limitations of Traditional Anesthesia Ventilators

There are several limitations that make accurate volume delivery difficult when using a traditional anesthesia ventilator and circle system to ventilate a pediatric patient. The problem is not merely one of convenience, especially for those pediatric patients who are also difficult to ventilate due to underlying disease. Hypoventilation, hypoxemia or barotrauma can all result if the traditional anesthesia ventilator is not used properly. The limitations of the
traditional anesthesia ventilator are (Figure 1):

- The compliance of the breathing system components (absorber canister, circle system and system hoses) allows a portion of the volume delivered by the

ventilator to be compressed in the system during inspiration. Circuit tubing expansion will also contribute to compliance. The amount of tidal volume reduction depends upon the inspiratory pressure and the total compliance of the breathing system.

- When using a circle system, changes in fresh gas flow will alter the delivered tidal volume. The degree to which fresh gas flow alters tidal volume depends upon respiratory rate, I:E ratio and total fresh gas flow and can be difficult to predict. If fresh gas flow is reduced without a compensatory increase in set tidal volume, minute ventilation will be reduced and hypoventilation and hypoxemia are possible. Likewise, an increase in fresh gas flow without reducing set tidal volume can cause hyperventilation and even excessive pressure with the potential for barotrauma.

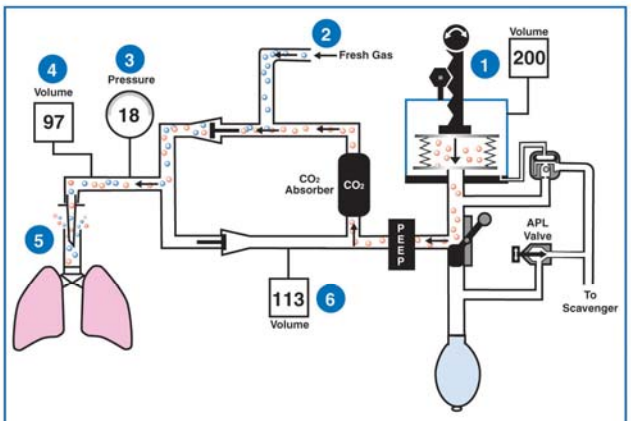

Example of traditional anesthesia circuit during inspiration indicating factors that influence volume delivery.

1. Volume set to be delivered is 200 mls
2. Fresh gas flow adds to volume delivered by the ventilator
3. Plateau Pressure (end of inspiration) is 18 cmH_2O
4. Volume delivered to the airway is altered by system compliance and fresh gas flow effects
5. Uncuffed endotracheal tube can leak inspired gas and reduce tidal volume
6. Exhaled volume sensor will overe[illegible] since gas compressed during inspiration is [illegible] or

Figure 1

- To avoid tracheal edema and injury, uncuffed endotracheal tubes are often used in pediatric patients. These tubes can cause variable amounts of leak during inspiration, reducing the amount of set tidal volume that reaches the alveoli. When using volume controlled ventilation, the ventilator is set to deliver a specific tidal volume. Any leaks during inspiration will reduce the volume delivered to the patient.

- Tidal volume monitoring is inaccurate since the volume sensor is typically located at the expiratory valve. During exhalation, both exhaled gas and the gas that was compressed in the breathing circuit during inspiration pass through the volume sensor. As a result, the sensor will indicate a tidal volume that is greater than the volume the patient actually receives. Depending upon the compliance of the circuit, the inspiratory pressure and the actual desired tidal volume, the difference between measured and delivered tidal volume can be significant.

Advantages of Modern Anesthesia Ventilators

When caring for pediatric patients, clinicians have used different strategies to ventilate their patients despite the limitations of traditional technology. A common approach is to adjust the ventilator settings based upon a clinical assessment which includes observation of chest expansion during inspiration and measurement of inspiratory pressure, as well as monitoring the effectiveness of ventilation with capnography and pulse oximetry or blood gas analysis. Clinical assessment is always important, but new anesthesia ventilators are designed to reduce or eliminate the limitations of traditional anesthesia ventilators. Depending upon the device and the manufacturer, different strategies are employed to overcome the influence of compliance and fresh gas flow on delivered volume.

When using volume controlled ventilation, the goal of modern ventilator designs is to deliver a volume to the patient that is as close as possible to the volume set to be delivered. To achieve this goal, the ventilator must be able to compensate for both the compliance of the breathing system and the influence of fresh gas flow on tidal volume independent of changes in lung compliance. Modern bellows ventilators utilize a flow sensor at the inspiratory limb to control the volume delivered by the ventilator. The ventilator output is controlled by the flow sensor such that the set volume is delivered to the breathing circuit independent of changes in fresh gas flow or the compliance of the system between the ventilator and the flow sensor. Newer bellows ventilators and piston anesthesia ventilators measure the compliance of the breathing system during the preuse checkout. The compliance measurement is then used to determine how much additional volume must be added to each breath to deliver the set volume to the patient. The influence of fresh gas on delivered volume is eliminated in the piston design by altering the configuration of the circle system and including a valve which prevents fresh gas from entering the patient circuit during mechanical inspiration. In addition, the exhaled volume measurement is corrected using the circuit compliance measurement.

During volume controlled ventilation, the target tidal volume is preset and the pressure which results is determined by the compliance of the patient's lung. Any decrease in lung compliance will therefore increase the inspiratory pressure. The pediatric patient potentially may be exposed to high airway pressures for any number of reasons from a surgeon leaning on the patient's chest, to a mainstem intubation, to a cough which coincides with the inspiratory cycle of the ventilator. In all of these cases, in volume mode, the ventilator will continue to deliver volume until it reaches either the target volume or the maximum pressure setting. Some modern anesthesia ventilators offer the ability to
preset the maximum pressure when using volume controlled ventilation. If the inspiratory pressure limit is set to 40 cmH2O, the ventilator will maintain pressure for the duration of inspiration, but cease to deliver gas once the pressure limit of 40 cmH2O is reached. **It is important to note that if the pressure limit is reached before the end of inspiration, the set tidal volume will not be delivered.** The pressure limit should therefore be used as a safety net to avoid excessive pressure due to transient causes, and not as a routine part of the ventilation strategy to limit the pressure of each breath.

Efforts to improve the design of anesthesia ventilators have been directed towards improving the accuracy of volume ventilation so that the patient reliably receives a tidal volume that is as close as possible to the set tidal volume. Another important

improvement in anesthesia ventilator design has been to make multiple modes of ventilation available to the clinician in the operating room.

Selecting the Ventilation Mode: Volume Control, Pressure Control and Pressure Support Ventilation

Volume controlled ventilation (VCV)[1] by definition is designed to deliver a relatively constant tidal volume despite changes in the patient's total pulmonary compliance. During volume controlled ventilation, inspiratory pressure varies and is dependent on the set tidal volume, PEEP, gas flow rate, gas flow resistance and respiratory system compliance. Increasing inflation pressure signals decreased pulmonary compliance or conductance (e.g., offset of neuromuscular blockade, bronchospasm) or obstruction of the breathing circuit (e.g., occluded ETT). The disadvantages of VCV include the potential to produce very high inflating pressures with the associated risk of barotrauma. With proper monitoring of inspiratory pressure, including the use of appropriate limits and alarms, changes in the patient's pulmonary mechanics can be observed and the risk of barotrauma minimized. When an uncuffed endotracheal tube is used, VCV may not be desirable since any leaks that occur during inspiration will reduce the volume delivered to the patient.

Pressure controlled ventilation (PCV) has become popular for ventilating children in the operating room since it has been difficult to deliver tidal volume accurately to children using the traditional anesthesia ventilator. When using PCV with a traditional anesthesia ventilator, the patient can receive an appropriate volume independent of circuit compliance, changes in fresh gas flow or leaks around the endotracheal tube. Furthermore, inspiratory pressure is set so that excessive inflating pressures and barotrauma are avoided. In contrast to volume controlled ventilation, during PCV, the pressure remains constant and the volume delivered varies depending primarily upon lung compliance. As a result, a decrease in the compliance or conductance of the patient's respiratory system, ventilator circuit, or tracheal tube will cause a reduction in delivered tidal volume. An increase in compliance, conversely, will result in an increased tidal volume. **Alarm settings for volume and minute ventilation can be useful to help detect changes in lung compliance during PCV.** Once baseline adequate ventilation is established at a set inspiratory pressure, upper and lower limits for tidal volume or minute ventilation alarms can be set close to the current baseline value. Any significant variation in lung compliance will cause a change in delivered volume and trigger the associated alarm. (Figure 2)

[1] Other terms used to describe this mode of ventilation include volume and pressure limited or targeted ventilation.

Figure 2: Pressure versus Volume Controlled Ventilation. Pressure controlled ventilation provides constant pressure and flow/volume vary with lung compliance. Volume controlled ventilation provides constant volume and pressure varies with compliance.

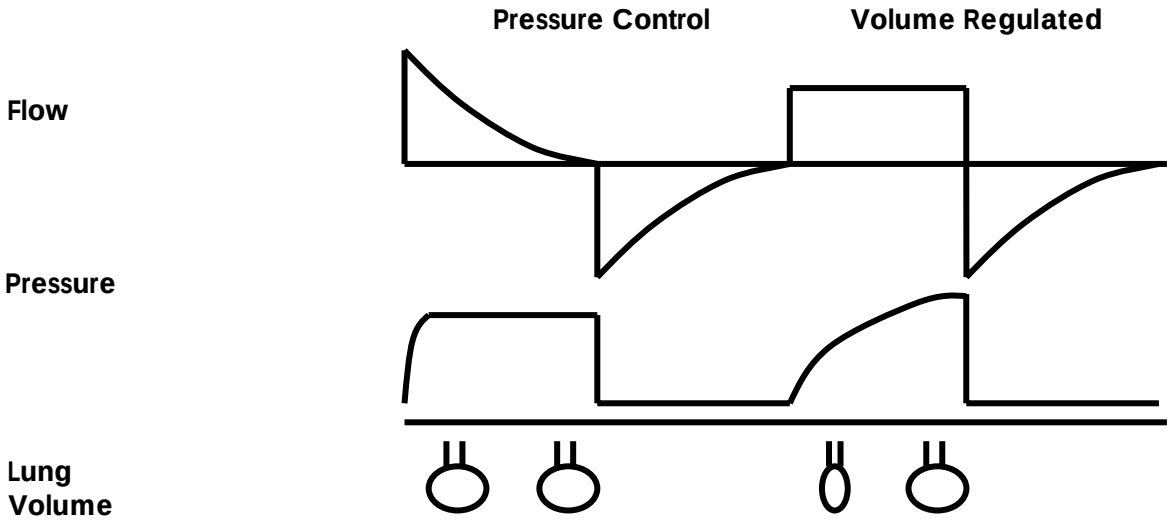

Pressure limited or pressure control ventilation (PCV) is frequently applied to infants and children receiving mechanical ventilatory support in whom severe pulmonary pathology dictates the need for rapid respiratory rates or high inflating pressures. Advantages of this mode of ventilation include limiting the peak inflating pressure delivered by the ventilator, thereby limiting the transalveolar pressure and potential for ventilator-induced lung injury. Since the set inspiratory pressure is maintained throughout the entire inspiratory cycle, volume is delivered at a lower peak pressure than during VCV. The decelerating flow used to produce PCV is thought to improve the distribution of gas flow to the lungs. In patients with underlying lung pathology, PCV may provide better gas exchange with a more rapid improvement in lung compliance and oxygenation than when using VCV.

Whereas PCV has become the standard approach to ventilating the pediatric patient during anesthesia, changes in ventilator technology and clinical practice could stimulate increasing use of VCV. We have already seen the many changes to the modern anesthesia ventilator that make volume delivery more accurate. In addition, uncuffed endotracheal tubes are no longer used exclusively even in small children. Cuffed endotracheal tubes are gaining popularity since they offer the ability to adjust the degree of leak, and long held concerns about morbidity related to endotracheal tubes have not been proven. VCV offers the advantage of a volume guarantee but the disadvantage of variable pressure. When using a newer anesthesia ventilator capable of accurate volume delivery and a cuffed endotracheal tube, VCV with a preset pressure limit may be a very useful approach to ventilation. Furthermore, evidence is accumulating that carefully controlled tidal volume (which is best achieved using a volume controlled mode of ventilation) can reduce morbidity and mortality in certain populations.

Pressure support ventilation (PSV) is widely used in the intensive care unit to support spontaneous ventilation for intubated patients. The primary advantage of PSV is the ability to use varying degrees of pressure support to reduce the work of breathing for the intubated patient. Indeed, the work of breathing imposed by an endotracheal tube or laryngeal mask airway and a circle system is an obstacle to allowing children to breathe spontaneously during anesthesia. Anesthesia ventilators are now available with the capability to provide PSV. Data on the benefits of PSV during anesthesia in children are very limited. One study compared PSV to CPAP used to ventilate anesthetized children under general anesthesia using the Proseal LMA and found that PSV produced lower

end-tidal CO2, respiratory rate, and work of breathing with greater exhaled tidal volumes. One can argue on a clinical basis that PSV may be quite useful. As long as the patient is making spontaneous breathing efforts, PSV can support safe spontaneous ventilation despite the imposed work of breathing by the circle system and the respiratory depressant effects of anesthetic agents. Clinical advantages may be better gas exchange, ability to titrate anesthetic depth (especially narcotics) based upon respiratory efforts and facilitating the emergence process. An important caveat is to remember the influence of anesthetic agents on the carbon dioxide response curve. Anesthetized patients typically require an elevated PCO2 to breathe spontaneously. **PSV may be useful to increase the volume and effectiveness of individual breaths thereby improving oxygenation and offsetting the impact of work of breathing on PCO2, but the minimum PCO2 that can be attained will be limited by the apneic threshold as spontaneous breathing efforts must be maintained.**

Modern anesthesia ventilators provide backup ventilation features that can be utilized if there is a risk of apnea during PSV. Synchronized Intermittent Mandatory Ventilation (SIMV) can be combined with PSV to insure that a minimum amount of minute ventilation will be provided. Depending upon the capabilities of the ventilator, SIMV can be used as either a volume or pressure controlled synchronized mode. When SIMV and PSV are used together, the patient will receive the preset SIMV breaths in synchrony with spontaneous efforts and will receive pressure support for additional breaths that exceed the SIMV rate. Should the patient cease to breathe, the SIMV breaths will continue to be delivered. Another backup mode that is available uses the Pressure Support settings to generate positive pressure breaths. Breaths are delivered at a preset minimum rate using the pressure support settings for both inspiratory and expiratory breaths. Although pressure support settings can be used as a safety net if apnea should occur during PSV, these backup modes should not be relied upon as a primary mode of controlled ventilation. In general, pressure support settings provide adequate tidal volumes when the patient is making spontaneous efforts. Pressure support settings will generate tidal volumes but the total volume may not be adequate in the absence of a patient effort.

Selected References

Schwartz RE, Stayer SA, Pasquariello CA: Tracheal tube leak test--is there inter-observer agreement? Can J Anaesth 1993; 40: 1049-52

Weber TR, Connors RH, Tracy TF, Jr.: Acquired tracheal stenosis in infants and children. J Thorac Cardiovasc Surg 1991; 102: 29-34

Main E, Castle R, Stocks J, James I, Hatch D: The influence of endotracheal tube leak on the assessment of respiratory function in ventilated children. Intensive Care Med 2001; 27: 1788-97

Khine HH, Corddry DH, Kettrick RG, Martin TM, McCloskey JJ, Rose JB, Theroux MC, Zagnoev M: Comparison of cuffed and uncuffed endotracheal tubes in young children during general anesthesia. Anesthesiology 1997; 86: 627-31

Murat I: Cuffed tubes in children: a 3-year experience in a single institution. Paediatr Anaesth 2001; 11: 748-9

Deakers TW, Reynolds G, Stretton M, Newth CJ: Cuffed endotracheal tubes in pediatric intensive care. J Pediatr. 1994; 125: 57-62

Stayer SA, Andropoulos DB, Bent ST, McKenzie ED, Fraser CD: Volume ventilation of infants with congenital heart disease: a comparison of Drager, NAD 6000 and Siemens, Servo 900C ventilators. Anesth Analg 2001; 92: 76-9

Stayer SA, Bent ST, Campos CJ, Skjonsby BS, Andropoulos DB: Comparison of NAD 6000 and servo 900C ventilators in an infant lung model.
Anesth Analg. 2000 Feb;90(2):315-21.

Stayer SA, Bent ST, Skjonsby BS, Frolov A, Andropoulos DB: Pressure control ventilation: three anesthesia ventilators compared using an infant lung model.
Anesth Analg. 2000 Nov;91(5):1145-50.

Dreyfuss D, Soler P, Basset G, Saumon G: High inflation pressure pulmonary edema. Respective effects of high airway pressure, high tidal volume, and positive end-expiratory pressure. Am Rev Respir.Dis. 1988; 137: 1159-64

Davis K, Jr., Branson RD, Campbell RS, Porembka DT: Comparison of volume control and pressure control ventilation: is flow waveform the difference? J Trauma 1996; 41: 808-14

Rappaport SH, Shpiner R, Yoshihara G, Wright J, Chang P, Abraham E: Randomized, prospective trial of pressure-limited versus volume- controlled ventilation in severe respiratory failure. Crit Care Med 1994; 22: 22-32

Badgwell JM, Swan J, Foster AC: Volume-controlled ventilation is made possible in infants by using compliant breathing circuits with large compression volume. Anesth Analg 1996; 82: 719-23

Steven JM, Cohen D.E., Scaalabassi R.J: Anesthesia equipment and monitoring., Smith's anesthesia for infants and children. Edited by Motoyama EK, Davis DA. St. Louis, MO, Mosby, 1996, pp 229-79

Badgwell JM, McLeod ME, Lerman J, Creighton RE: End-tidal PCO2 measurements sampled at the distal and proximal ends of the endotracheal tube in infants and children. Anesth Analg 1987; 66: 959-64

Bregeon F et al. Mechanical ventilation affects lung function and cytokine production in an experimental model of endotoxemia. Anesthesiology. 2005;102:331-9.

Von Goedecke A et al. Pressure support ventilation versus continuous positive airway pressure ventilation with the Proseal laryngeal mask airway: A randomized crossover study of anesthetized pediatric patients. Anesthesia and Analgesia. 2005;100:357-360.